Overview

SITRANS FUS060 is a transit time based transmitter designed for ultrasonic flowmetering with dedicated sensors in the FUS in-line series up to DN 4000. SITRANS FUS060 is engineered for high performance and is suitable for 1-path, 2-path and 4-path flowmeters.

Benefits

- Superior signal resolution for optimum turn down ratio
- Simple menu-based local operation with two-line display and four optical input elements, for unlimited use in potentially explosive atmospheres
- Self-monitoring and diagnostic
- Operate up to 4 paths
- ATEX II 2 G Ex dem [ia/ib] IIC T6/T4/T3 Gb
- Remote installation up to 120 m from sensor
- 1 analog output (4 to 20 mA) standard with HART-protocol, 1 digital frequency or pulse output, 1 relay output for limit, alarms, flow direction
- PROFIBUS PA Profile 2, 1 digital frequency or pulse output

Design

The transmitter type FUS060 is designed for remote installation in non-hazardous or hazardous areas.

The transmitter is designed for use in a flowmeter system together with sensors type SONOKIT, SONO 3300 and SONO 3100.

The FUS060 is ordered as part of a complete flowmeter system. It can be ordered separately as spare part and manually programmed with the sensor data.

Application

The main application for flowmeters with the transmitter SITRANS FUS060 is measurement volume of flow within the general, petrochemical and chemical industries, power engineering and water and waste water, as well as various types of oils and liquid gases.

Integration

The transmitter output is often used as input for an automation system or as input for systems of remote reading.

The SITRANS FUS060 transmitter offers current, pulse and relay outputs as standard output functions and supports HART or Profibus PA communication.

The settings of the transmitter output functions are individually programmed via keypad and display menu.

Function

Displays and keypad

Operation of the SITRANS FUS060 transmitter can be carried out using:

- Keypad and display unit
- HART communicator
- PC/laptop and SIMATIC PDM software via HART communication
- PC/laptop and SIMATIC PDM software using PROFIBUS PA communication

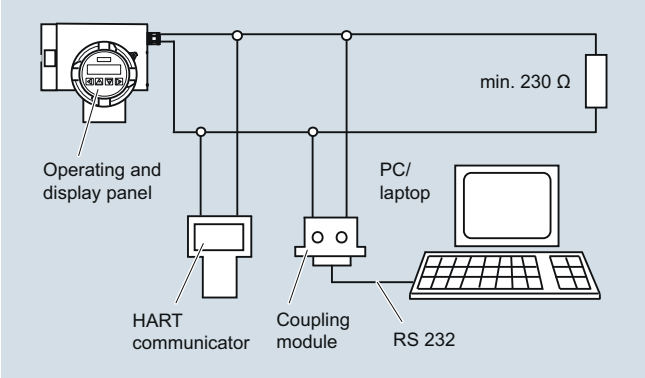

HART communication

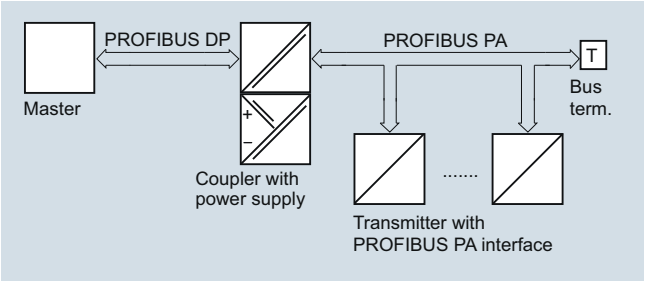

PROFIBUS PA communication

The operating and display panel permits simple operation without supplementary equipment. It is not necessary to open the housing. All changes to a setting can therefore also be carried out in the potentially explosive atmosphere.

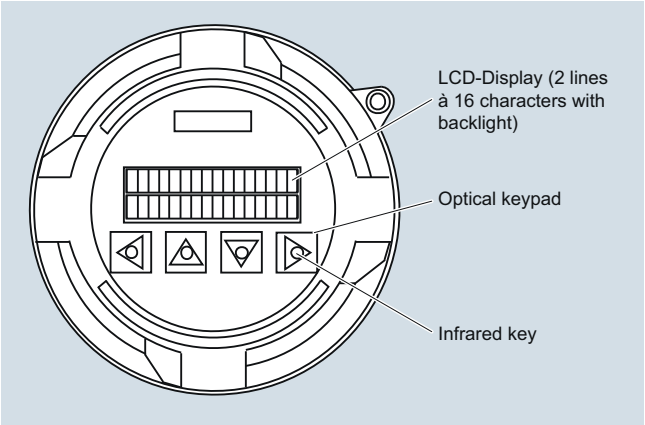

Operating and display panel

The individual functions and parameters are selected using a hierarchical, multi-language input menu and four infrared keys. The parameters can be specifically selected and modified using codes, e.g.:

- Operating parameters such as measuring range, physical dimensions, device information
- Limits for flow, totalizer, ultrasonic velocity or ultrasonic amplitude
- Noise suppression using damping, error stages and hysteresis
- Display parameters (freely-configurable display)
- Display in volume or mass dimensions
- Density as constant input value for conversion of volume into mass dimensions
- Forward/backward measurement
- Flow direction
- Diagnostics functions and control values
- Functions of the PROFIBUS PA output:
  flow, net quantity (volume or mass), ultrasonic velocity, ultrasonic amplitude, forward quantity (volume or mass), backward quantity (volume or mass)
- Functions of the analog output:
  flow, ultrasonic velocity or ultrasonic amplitude
- Functions of digital output 1:
  pulse output, frequency output, limit, flow direction or device status
- Functions of digital output 2:
  limit, flow direction or device status
- Simulation of output signal via analog output, digital output 1 and digital output 2

The HART protocol is implemented via the analog output (current output). Using this communication facility, the device can be parameterized with a PC/laptop and SIMATIC PDM software in addition to local operation.

In the version with PROFIBUS PA, the analog output is replaced by the digital PROFIBUS PA output. The device can then be parameterized via PROFIBUS communication and with SIMATIC PDM in addition to local operation.

Technical specifications

Input	
Measurement	Flow by measuring the transit time difference of ultrasonic signals through ultrasonic transducers in DN 100 (4") ... 3000 (120") 2-path sensor pipes (depending on selected size, 1-path or 4-path special solutions are possible).
Nominal diameters and number of paths	2-path DN 100 (4") ... DN 3000 (120") (depending on size, optionally also 1-path and 4-path)
Max. cable length	120 m (395 ft) (shielded coaxial cable). For Ex version the transducer cable length is restricted to 3 m (9.84 ft) in order to meet requirements for electrical immunity. For systems with sizes ≥ DN 1500 (60") cable length is recommended to be max. 30 m (98.4 ft).
Output	
Function	Current output programmable for flow, sound velocity or amplitude level.
Analog output	Active current output (13.2 V < open loop voltage < 15.8 V)
• Signal range	4 ... 20 mA
• Upper limit	20 ... 22.5 mA, adjustable
• Signal on alarm	3.6 mA, 22 mA, or 24 mA
• Load	Max. 600 Ω; for non Ex version ≥ 230 Ω for HART communication ≤ 330 Ω for Ex-version
• Only PROFIBUS PA version:	Analog output omitted, is replaced by digital PROFIBUS PA interface
Digital output 1	
Function	Pulse, frequency or status output - programmable for pulses, frequency, alarm, limit or status.
• Active or passive signal, can be configured with positive or negative logic	Active: 24 V DC, ≤ 24 mA, R_i = 300 Ω Passive: open collector, 30 V DC, ≤ 200 mA
• For explosion protection (ATEX version) and PROFIBUS PA version	Only passive: open collector 30 V DC, ≤ 100 mA
• Output function, configurable	Pulse output • Adjustable pulse significance ≤ 5000 pulses/s • Adjustable pulse width ≥ 0.1 ms Frequency response • f_{END} selectable up to 10 kHz Limit for flow, totaliziers,ultrasonic velocity or ultrasonic amplitude device status, flow direction

Digital output 2	
Function	Relay output - programmable for alarm, limit or status indication.
• Relay, NC or NO contact	Switching capacity max. 5 W Max. 50 V DC, max. 200 mA DC Self-resetting fuse, R_i = 9 Ω
• For explosion protection (ATEX version)	Max. 30 V DC, max. 100 mA DC, 50 mA AC (cf. EC-Type Examination certificate)
• Output function, configurable	Limit for flow, ultrasonic velocity or ultrasonic amplitude flow direction device status
• Only PROFIBUS PA version:	Digital output 2 omitted
Communication via analog output 4 ... 20 mA	
• PC/laptop or HART communicator with SITRANS F flowmeter	
- Load with connection of coupling module	min. 230 Ω (max. 330 Ω for Ex-version)
- Load with connection of HART communicator	min. 230 Ω
- Cable	2-wire shielded ≤ 3 km (≤ 1.86 miles) Multi-core shielded ≤ 1.5 km (≤ 0.93 miles)
- Protocol	HART, version 5.1
Communication via PROFIBUS PA interface	Layers 1 + 2 according to PROFIBUS PA Communication system according to IEC 61158/EN 50170
• Power supply	Separate supply, four-wire device Permissible bus voltage 9 ... 32 V See certificates and approvals
• Current consumption from bus	10 mA; ≤ 15 mA in event of error with electronic current limiting
Electrical isolation	Outputs electrically isolated from power supply and from one another
Accuracy	
Error in measurement (at reference conditions)	
• Pulse output	≤ ± 0.5 % of measured value at 0.5 ... 10 m/s or ≤ ± 0.25/V[m/s] % of measured value at flow < 0.5 m/s
• Analog output	As pulse output plus ± 0.1 % of measured value, ± 20 µA
• Repeatability	≤ ± 0.25 % of measured value at 0.5 ... 10 m/s
Reference conditions (water)	
• Process temperature in the connected sensor	25 °C ± 5 °C (77 °F ± 9 °F)
• Ambient temperature at the transmitter	25 °C ± 5 °C (77 °F ± 9 °F)
• Transmitter warming-up time	30 min.
Installation conditions of connected sensor	Upstream section > 10 x DN and downstream section > 5 x DN

Rated operation conditions	
Ambient conditions	
Ambient temperature	
• Operation	-20 ... +50 °C (-4 ... +122 °F)
• In potentially explosive atmospheres	Observe temperature classes
• Storage	-25 ... +80 °C (-13 ... +176 °F)
Enclosure rating	IP65 (NEMA 4)
Electromagnetic compatibility	For use in industrial environments
• Emitted interference	To EN 55011/CISPR-11
• Noise immunity	To EN/IEC 61326-1 (Industry)
Medium conditions	The measuring media must be ultrasonic signal compatible. It must be homogeneous and not two-phased to transfer the acoustic ultrasonic signals.
• Process temperature	-200 ... +250 °C (-328 ... +482 °F) (not directly influenced by medium temperature)
• Gases/solids	Influence accuracy of measurement (approx. max. 3 % gases or solids)
Design	
Separate version	Transmitter is connected to the transducers via 3 ... 120 m (9.8 ... 395 ft) long specially shielded cables (coaxial cable) For ATEX versions mounted in the Ex area only with 3 m (9.8 ft) long cables.
Enclosure material	Die-cast aluminum, painted
Wall mounting bracket (standard and special)	Stainless steel (standard: always incl.)
Weight of transmitter	4.4 kg (9.7 lb)
Electrical connection	Cable glands (always incl.) • Power supply and outputs - 2 x M20 (HART)/ M25 (PROFIBUS) or - 2 x ½"-NPT (HART) • Transducers/sensor - 2/4 x M16 or - 2/4 x ½" NPT
Displays and controls	
Display	LCD, two lines with 16 characters each
• Multi-display: 2 freely-selectable values are displayed simultaneously in two lines	Flow, volume, mass flow, mass, flow velocity, speed of sound, ultrasonic signal information, current, frequency, alarm information
Operation	4 infrared keys, hierarchical menu shown with codes
Power supply	
Supply voltage	
• Standard version	120 ... 230 V AC ± 15 % (50/60 Hz) or 19 ... 30 V DC/ 21 ... 26 V AC
• Ex version	19 ... 30 V DC/21 ... 26 V AC
Power failure	No effect for at least 1 period (> 20 ms)
Power consumption	Approx. 10 VA/10 W
Certificates and approvals	
Explosion protection	ATEX II 2 G Ex dem [ia/ib] IIC T6/T4/T3 Gb T6 for media < 85 °C (185 °F) T5 for media < 100 °C (212 °F) T4 for media < 135 °C (275 °F) T3 for media < 200 °C (392 °F)

Coaxial cable		
Standard Coaxial cable (75 Ω)	Coaxial cable with SMB straight plug on one end for connection to the FUS060	
Outside diameter	Ø 5.8 mm	
Length	3, 15, 30, 60, 90, 120 m (9.84, 49.21, 98.43, 196.85, 295.28, 393.70 ft) between sensor and transmitter	
Material (outside jacket)	black PE	
Ambient temperature	-10 ... +70 °C (14 ... 158 °F)	
High temperature Coaxial cable (75 Ω)	Coaxial cable with SMB straight plug on one end for the connection to FUS060	
Outside diameter	Ø 5.13 mm (first 0.3 m (0.98 ft) part to the transducer), Ø 5.8 mm (for remaining cable to the transmitter - with SMB plug at the end) and between these is a black hot melt junction Ø 16 mm (length 70 mm)	
Length	3, 15, 30, 60, 90, 120 m (9.84, 49.21, 98.43, 196.85, 295.28, 393.70 ft) between sensor and transmitter (max 3 m 9.84 ft) transducer cable length for Ex area mounted transmitters)	
Material (outside jacket)	Brown PTFE (0.3 m (0.98 ft) part) and black PE (for remaining cable)	
Ambient temperature	-200 ... +200 °C (-328 ... +392 °F) (brown PTFE transducer part) and -10 ... +70 °C (14 ... 158 °F) (black PE for remaining transmitter cable part)	

Dimensional drawings

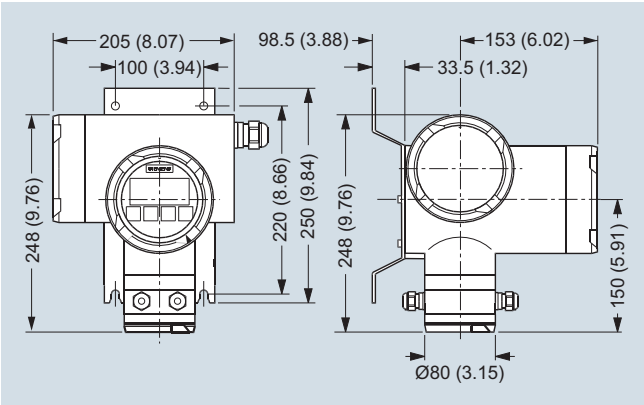

SITRANS FUS060 with standard mounting bracket, dimensions in mm (inch)

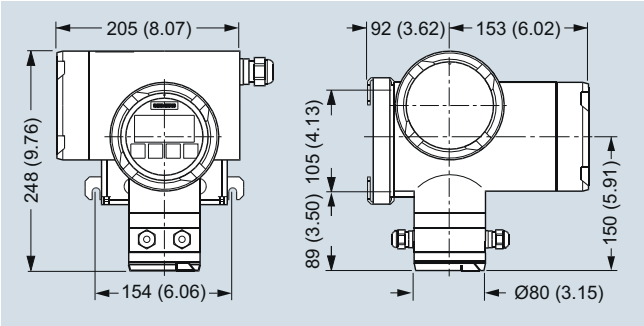

SITRANS FUS060 with optional special mounting bracket, dimensions in mm (inch)

Schematics

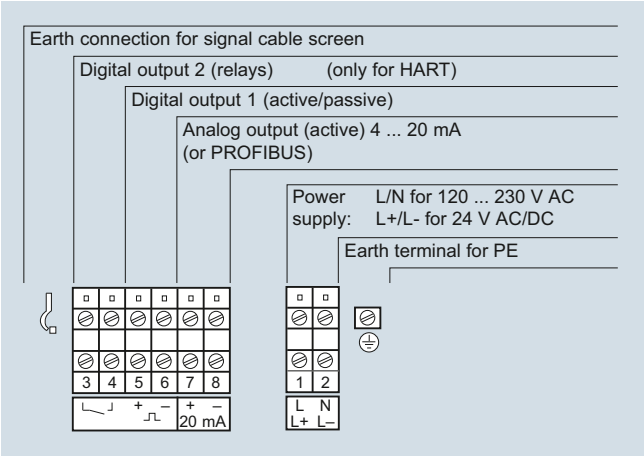

Electrical connection SITRANS FUS060

Transmitter FUS060 operating instructions, accessories and spare parts

Operating instructions

Description	Article No.
• English	**A5E01204521**
• German	**A5E02123845**

This device is shipped with a Quick Start guide and a CD containing further SITRANS F US literature.

All literature is available to download for free, in a range of languages, at www.siemens.com/processinstrumentation/documentation

Accessories

Description	Article No.	
Standard wall mounting bracket	**7ME5933-0AC04**	
Special wall-/pipe mounting bracket kit	**7ME5933-0AC05**	
Safety clamp for electronic cover with glass plate (7ME5933-0AC01)	**7ME5933-0AC06**	

Process Device Manager SIMATIC PDM		
SIMATIC PDM Details about the SIMATIC PDM tool can be found on page 8/9, chapter "Communication and Software"	**See page 8/17, chapter "Communication and Software"**	
HART modem for communication with FUS060 HART, PC and SIMATIC PDM		
HART modem With USB connection	**7MF4997-1DB**	

Spare parts

SITRANS FUS060 transmitter, available standard and Ex versions

The transmitter configuration is made in the flowmeter Order codes (together with the sensors).
The information below is for spare part ordering only and with fixed standardized pre-settings for a DN 2000 2-path system.

Description	Version	Enclosure	Supply	Article No.	
FUS060, 230 V, HART, Metric cable glands	Transmitter for remote connection	IP65 (NEMA 4)	115 … 230 V AC 50/60 Hz	**7ME3050-2BA10-1BA1**	
FUS060, 230 V, HART, Imperial cable glands	Transmitter for remote connection	IP65 (NEMA 4)	115 … 230 V AC 50/60 Hz	**7ME3050-2BA10-1BA2**	
FUS060, 230 V, PROFIBUS, Metric cable glands	Transmitter for remote connection	IP65 (NEMA 4)	115 … 230 V AC 50/60 Hz	**7ME3050-2BA10-1DA1**	
FUS060, 230 V, PROFIBUS, Imperial cable glands	Transmitter for remote connection	IP65 (NEMA 4)	115 … 230 V AC 50/60 Hz	**7ME3050-2BA10-1DA2**	
FUS060, 24 V, HART, Metric cable glands	Transmitter for remote connection	IP65 (NEMA 4)	19 ... 30 V DC/ 21 ... 26 V AC	**7ME3050-2BA20-1BA1**	
FUS060, 24 V, HART, Imperial cable glands	Transmitter for remote connection	IP65 (NEMA 4)	19 ... 30 V DC/ 21 ... 26 V AC	**7ME3050-2BA20-1BA2**	
FUS060, 24 V, PROFIBUS, Metric cable glands	Transmitter for remote connection	IP65 (NEMA 4)	19 ... 30 V DC/ 21 ... 26 V AC	**7ME3050-2BA20-1DA1**	
FUS060, 24 V, PROFIBUS, Imperial cable glands	Transmitter for remote connection	IP65 (NEMA 4)	19 ... 30 V DC/ 21 ... 26 V AC	**7ME3050-2BA20-1DA2**	
FUS060, ATEX, 24 V, HART, Metric cable glands	Transmitter for remote connection	IP65 (NEMA 4) ATEX approval	19 ... 30 V DC/ 21 ... 26 V AC	**7ME3050-2BA21-1CA1**	

Ordering of pre-configured FUS060 spare transmitters only via PVR (product variation request - special request)

Description	Article No.	
Operating/Display module	**7ME5933-0AC00**	
Electronics cover with glass plate (non Ex) . Die cast aluminum, with corrosion-resistant Basic Polyester powder coating (min. 60 µm)	**7ME5933-0AC01**	
Cover for sensor cable and gasket. Die cast aluminum, with corrosion-resistant Basic Polyester powder coating (min. 60 µm)	**7ME5933-0AC02**	
Cover for mains supply/communication. Die cast aluminum, with corrosion-resistant Basic Polyester powder coating (min. 60 µm)	**7ME5933-0AC03**	
FUS060 Sensor connection PCBA, Standard versions only, 1 pc.	**A5E02551331**	
FUS060 Sensor connection PCBA, ATEX version only, 1 pc.	**A5E02551334**	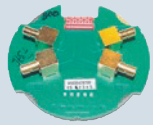
M20 cable gland set for FUS060 (M20) power and output connection, gray PA plastic, 2 pcs. • cables Ø 6 ... 12 mm (0.24" ... 0.47") • -40 ... +100 °C (-40 ... +212 °F)	**A5E02246350**	

Description	Article No.	
M20 cable gland set for FUS060 ATEX version power and output connection, PA plastic, 1 x in blue (ATEX Ex i) and 1 x gray (ATEX Ex-e) • cables Ø 5 ... 9 mm (0.20" ... 0.35") • -20 ... +95 °C (-4 ... +203 °F)	**A5E02246356**	
1/2" NPT cable gland set for FUS060 (NPT) power and output connection, gray PA plastic, 2 pcs. • cables Ø 6 ... 12 mm (0.24" ... 0.47") • -40 ... +100 °C (-40 ... +212 °F)	**A5E02246396**	
M25 cable gland set for the FUS060 PA (M25) power and output connection, gray PA plastic, 2 pcs. • cables Ø 9 ... 16 mm (0.35" ... 0.63") • -40 ... +100 °C (-40 ... +212 °F)	**A5E02246378**	
M16x1.5 cable gland set for FUS060 (M16) sensor connection, gray PA plastic, 2 pcs. and 2 pcs. blind. • cables Ø 5 ... 9 mm (0.20" ... 0.35") • -40 ... +100°C (-40 ... +212 °F)	**A5E02593526**	
M16 x 1.5 cable gland set for FUS060 (M16) sensor connection, brass chrome, 2 pcs. and 2 pcs. blind • cables Ø 5 ... 9 mm (0.20" ... 0.35") • -20 ... +105°C (-4 ... +221 °F)	**A5E02246369**	
½" NPT cable gland set for FUS060 (NPT) sensor connection, 4 pcs. M16 bush to ½" NPT and 4 pcs. ½" NPT gray PA plastic glands • cables Ø 5 ... 9 mm (0.20 ... 0.35") • -20 ... +100 °C (-4 ... +212°F)	**A5E02247877**	

Transmitter SITRANS FUS060

Cables for FUS060

Description	Length m (ft)	Article No.
Coaxial cable for FUS060, (75 Ω, max. 70 °C (158 °F), black PVC) (2 pcs.)	3 (9.84)	**A5E00875101**
	15 (49.21)	**A5E00861432**
	30 (98.43)	**A5E01278662**
	60 (196.85)	**A5E01278682**
	90 (295.28)	**A5E01278687**
	120 (393.70)	**A5E01278698**
High temp. coaxial cable for FUS060; with 0.3 m brown PTFE high temp. transducer part, max. 200 °C (392 °F) and black PVC for remaining transmitter part with SMB plug, max. 70 °C (158 °F), impedance 75 Ω (2 pcs.)	3 (9.84)	**A5E00875105**
	15 (49.21)	**A5E00861435**
	30 (98.43)	**A5E01196952**
Special coaxial cable sets for low temperature cryogenic systems; with SMB plug for transmitter SITRANS FUS060, PTFE material, temp. -200 ... +200 °C (-328 ... .+392 °F), impedance 75 Ω (2 pcs.)	10 (32.84)	**A5E02085593**
	15 (49.21)	**A5E03262088**
	30 (98.43)	**A5E02085644**
	40 (131.23)	**A5E02085649**